FastCraft®

20V ONE HAND CHAINSAW

Model 2020X-L

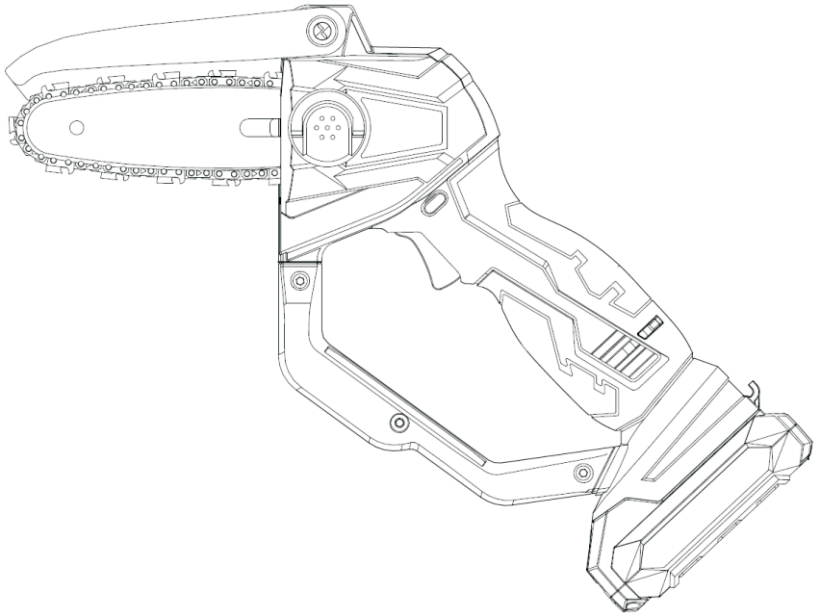

Owner's Manual

Read this manual before using this product!

Brief: Instructions manuals provide valuable hints for using your new machine. They enable you to use all functions, and they help you avoid misunderstandings and prevent damage.

Please take the time to read this manual carefully and keep it for future reference.

. The saw is optimally protected against kick-back by the riving knife with tip protection. Never remove the riving knife. There is a risk of injury!

12. Sharpen the Saw Chain

. The saw teeth must be sharpened if the sawdust becomes powdery, if additional force is required for the incision, if a straight incision is no longer possible or if the vibrations become stronger.
. Blunt saw chains should be re-sharpened professionally.
. Replace the saw chain if there is considerable damage that cannot be repaired by filing.

13. Cleaning the Guide Bar

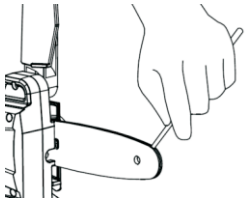

. Thoroughly clean the notch of the guide bar.
. Replace the guide bar if the guide groove is damaged or worn and the saw chain has too much lateral space.
. Tighten all accessible screws, if necessary.

14. Battery Disposal

. Run the motor until the battery is completely discharged.
. Clean the sprocket area with a brush or compressed air.
. Use a cloth, a paintbrush or a brush to remove dust and wood splinters. Always keep the ventilation slots cleans and free from obstructions.
. Never use benzene or similar aggressive chemicals or abrasives for cleaning, in order not to damage the garden pruner.
. From time-to-time check that all screws are firmly secured.
. Store the garden pruner and the accessory indoors in a dry place that is protected from dust, dirt and extreme temperatures.
. Store the garden pruner out of reach of children and persons in need of supervision.

6. After sales

Email customer service at **warranty@nycl.us** if above remedies fail.
Please visit our website: **WWW.FASTCRAFT.US** for additional parts or accessories.

FastCraft®

1. Safety Notes

⚠ Please note the included General Safety Notes and the following safety notes to avoid malfunctions, damage or physical injury:
. Please read this manual carefully and use the machine only according to this manual.
. Dispose of used packaging material carefully or store it out of the reach of children. There is a danger of suffocation!
. The garden pruner is designed for cutting branches, slats, hard and soft wood. Only use the garden pruner as indicated in this manual for cutting wood. The machine has not been designed for continuous, professional use.
. Keep the garden pruner out of reach of children. It is not a toy.
. Persons with limited physical, sensorial or mental abilities are not allowed to use the garden pruner, unless they are supervised for their safety by a qualified person or are briefed by the responsible person how to use the machine.
. Children and adolescents are not allowed to use the garden pruner. Excluded from this prohibition are young people are young people over 16 years of age under the supervision of an expert for the purpose of training.
. Please note the warning symbols. They mark all those instructions which are important for safety reasons. Observe these instructions as failure to do so could result in serious injury!
. The garden pruner must e used only by one person at a time. Make sure bystanders do not stay in the vicinity of garden pruner's work area.
. Check the safe operating conditions of the garden pruner, in particular the guide bar and the saw chain, before each operation.
. Always have a safe stand when working with the saw.
. Hold the machine firmly and securely when switching on.
. Make sure the guide bar and the saw chain must be free when switched on and must not come into contact with the work-piece to be cut.
. Keep your hands away from the sawing area. Do not reach the work-piece. Contact with the saw china may result in injury.
. Guide the garden pruner onto the work-piece only when switched on. Otherwise, there is a risk of kick-back if the saw chain gets caught in the work-piece.
. When sawing, the base plate must always face against the work-piece. The saw chain can become jammed and lead to loss of control over the machine.
. When the cut is completed, switch off the machine and then pull the saw chain out of the cut only after it has come to a standstill. This way you can avoid kick-back.
. Clamp the material to be processed well. Do not support the work-piece with your hand or foot. Do not touch objects or the floor with the saw running. Danger of kick-back.
. When sawing converted timber and thin branches always use a strong support, such as a sawing trestle. Do not stack timber pieces.

. Before cutting logs, secure the logs in position.
. When working on sloping ground, make sure to work facing upwards.
. Be particularly careful when cutting splintered wood. Splinters of wood can be torn along by the saw chain and increase the risk of injury!
. Foreign objects such as nails, screws, metal parts, sand etc. Lead to increased wear on the guide bar and saw chain.
. A blunt saw chain can cause overheating and damage to the motor.
. Always pull out the battery when checking the chain tension, to re-tighten it, to mount the saw chain and to eliminate faults! Also remove the battery if you do not use the machine temporarily.

2. Additional battery and changers safety notes

. WARNING: Li-Ion batteries, if incorrectly used, stored or charged are a fire, burn and explosion hazard.

3. Use the battery charger correctly

. Only plug the battery charger to 110V mains power.
. Refer to the section of this manual relating to use of the battery charger before attempting to charge the battery.
. Do not attempt to use the charger with any batteries other than those supplied. Keep the battery charger clean; foreign objects and dirt can cause a short circuit and block the ventilation holes. Failure to follow these instructions may cause overheating or fire.
. Allow batteries to cool for 15 minutes after charging or heavy use. Failure to follow these instructions may cause overheating or fire.
. Recharge only with the charger specified by the manufacturer. A charger that is suitable for one type of battery may create a risk of fire when used with another battery pack. Charge the lithium-ion battery only with the supplied charger or a charger specifically designed for this item.
. Use the machine only with specifically designated battery packs. Use of any other battery packs may create a risk of injury and fire.
. If the power cord of the charger is damaged, it must be replaced by the manufacturer, an authorised service workshop or a specialist before use.
. Keep the battery out of reach of children.
. When not in use batteries should be stored at room temperature(approx.20℃).
. When battery is not in use, make sure the battery cannot be shorted accidentally. Keep the battery clean at all times. Keep it away from other metal objects, like paper clips, coins, keys, nails, screws or other small metal objects that can make a connection from one terminal to another. Shorting the battery terminals together may cause burns or a fire.
. If used incorrectly, liquid may leak from the battery. Avoid contact with it. In case of

. Do not cut if saw chain is in contact with the work-piece, is in the work-piece or may hit an object. This can lead to serious injuries.
. Clamp loose work-pieces before cutting them. Remove foreign objects such as nails, screws, etc.
. When cutting a branch that is under tension be alert for spring back. When the tension in the wood fibres is released, the spring-loaded limb may strike the operator and/or throw the garden pruner out of control.
. Use extreme caution when cutting brush and saplings. The slender material may catch the saw chain and be whipped toward you or pull you off balance.
. When the saw chain is running, first place the base plate on the surface of the work-piece and let the saw cut on its own. Apply only light pressure to the saw. The chain speed should not be much slower.

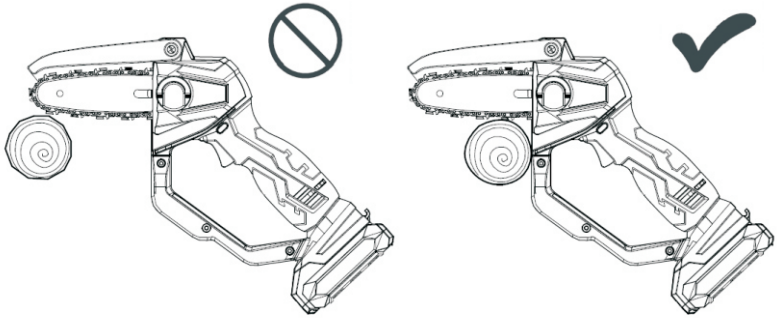

. To cool the saw, allow the machine to run idle for a short time.
. Carry the garden pruner by the handle with the motor switched off and away from your body. When transporting or storing the garden pruner always fit the guide bar cover. Proper handling of the saw will reduce the likelihood of accidental contact with the moving saw chain.

11. Changing the Saw Chain

. Only handle the saw chain with gloves and remove the battery first!
. Inspect the saw chain and the guide bar for damage or signs of wear.
. Never put a new chain on a worn guide bar.
. Let each new saw chain break-in first!
. When attaching the saw chain, observe the running direction!

Kick-back
. The shape of the riving knife largely eliminates the risk of kick-back.

your body and arm to allow you to resist kickback forces. Kick-back forces can be controlled by the operator, if proper precautions are taken. Do not let go of the saw.
. Only use replacement guide bars and saw chains specified by the manufacturer’s sharpening and maintenance instructions for the saw chain. Decreasing the depth gauge height can lead to increased kick-back.

10. Work Instructions

. Keep all parts of the body away from the saw chain when the saw is operating. Before you start the saw, make sure the saw chain is not contacting anything. A moment of inattention while operating the saw may cause entanglement of your clothing or body with the saw chain.
. Hold the saw by insulated gripping surfaces only, because the saw chain may contact hidden wiring. Saw chains contacting a “live” wire may make exposed metal parts of the saw “live” and could give the operator an electric shock.
. Wear eye protection, further protective equipment for hearing, head, hands, legs and feet is recommended. Adequate protective equipment will reduce personal injury from flying debris or accidental contact with the saw chain.
. Always keep proper footing and operate the saw only when standing on fixed, secure and level surface. Slippery or unstable surfaces may cause a loss of balance or control of the saw.
. When cutting a limb that is under tension, be alert for spring back. When the tension in the wood fibres is released, the spring-loaded limb may strike the operator and/or throw the saw out of control.
. Use extreme caution when cutting brush and saplings. The slender material may catch the saw chain and be whipped toward you or pull you off balance.
. Carry the saw by the handle with the saw switched off and away from your body. When transporting or storing the saw, always fit the guide bar cover. Proper handling of the saw will reduce the likelihood of accidental contact with the moving saw chain.
. Follow instructions for lubricating, chain tensioning and changing the bar and chain. Improperly tensioned or lubricated chain may either break or increase the change for kickback.
. Cut wood only. Do not use saw for purposes not intended. For example: do not use saw for cutting metal, plastic, masonry or non-wood building materials. Use of the saw for operations different than intended could result in a hazardous situation.
. This saw is not intended for tree felling. Use of the saw for operations different than intended could result in serious injury to the operator or bystanders.
. When working with the machine, hold the garden pruner and the extension pole firmly with both hands. One hand on the handle of the garden pruner and the other hand with outstretched arm on the extension pole. If necessary, use the should strap.
. Never reach over the riving knife or under the base plate. There is a risks of injury.

accidental contact, rinse with water. If the liquid gets into the eyes, seek additional medical attention. Leaking battery fluid may cause skin irritation or burns.
. Protect the battery and charger from moisture. Do not operate the charger outdoors.
. When the charger is not in use, unplug it from the wall socket before cleaning and servicing.
. Take special care of the battery. Avoid dropping it onto any hard surface and do not subject it to pressure or any other form of mechanical stress. Keep the battery away from extreme heat or could. Do not open, disassemble, crush, heat above 60℃ or incinerate. Do not dispose of in fire or similar.
. Only use original accessories and original spare parts.
. In the interest of your own safety, do not modify the garden pruner in any way.
. Should the garden pruner become damaged do not use it and have it repaired by a professional or contact our customer support department. Do not disassemble the machine or try repairing it yourself.
. The machine is designed for operation in altitudes of up to 2000 m above sea level.
. Do not let familiarity gained from frequent use of tools allow you to become complacent and ignore tool safety principles. A careless action can cause severe injury within a fraction of a second.
. Keep handles and grasping surfaces dry, clean and free from oil and grease. Slippery handles and grasping surfaces do not allow for safe handling and control of the tool in unexpected situations.
. Never service damaged battery packs. Service of battery packs should only be performed by the manufacturer or authorized service providers.

4. Personal Safety Equipment

. When working with the garden pruner, always wear safety glasses and gloves. Wear a safety helmet when working with the garden pruner, where head injuries are to be expected.
. To avoid damage to your hearing, always wear hearing protection.
. Always wear cut-proof and tight-fitting clothes and safety boots.

5. Symbol Explanation


Read instruction manual to electrical power lines.


Keep sufficient distance and follow the warnings.

Protect  from moisture.


Beware of kick-back


Wear protective equipment such as ear muffs, gloves, goggles, protective headgear and sturdy shoes.

Batteries do not belong in the household Garbage.
For battery disposal please check with your local council.

6. Safety Notes for the Extension Pole

. The extension pole is not a toy. Keep the article out of reach of children.
. Make sure that dirt cannot get into the contacts. Do not insert spiky metallic objects into the contacts.
. Keep the extension pole from moisture and make sure water cannot get into the contacts.
. Make sure the garden pruner is not touching anything and moving free.
. Cutting with the garden pruner together with the extension pole when standing on a ladder or on any other instable place is not allowed.
. Do not stand under the branch you are cutting. Branches may fall without warning. Work at an angle of no more than 60℃.
. Keep in mind that, when using the upper point of the saw, the saw may kick back quite violently.
. Keep your eyes not only on the branches you are cutting; also, permanently observe the ground to prevent tripping over branches that already have fallen down.
. Do not operate the machine in the vicinity of electrical power lines.
. Keep bystanders always from the working area. Have sufficient distance to uninvolved person.

7. Technical Data

20V One Hand Chainsaw	
Nominal Voltage	20V
No-load Speed	3700rpm
Chain Speed	6.7m/s
Dimensions	38x19x17cm
Weight (without battery)	1.38kgs
Guide Bar Length	120mm (4.7”)
Max. Cutting Capacity	120mm (4.7”)
Degree of Protection	IPX0
Li-ion Battery	
Voltage	20V

. Use only sharp saw chains. Blunt saw chains can jam more easily. Check the chain tension more frequently when working with new saw chains, as the chain stretches more at first.
The service life of a saw chain depends on sufficient lubrication and the correct tension.
Make sure to lubricate the saw chain sufficiently! Always lubricate the saw chain with the power off.

. During operation, the chain heats up and re-tensioning may be necessary. Relax the chain after work so that it is not too tight the next time the cold machine is used.
. Do not re-tighten saw chains that have become too hot. After it has cooled down, it may contract and lie too tight against the sword. Wait until the saw chain has cooled down before re-tensioning.
. The tension of the saw chain is important for your safety and the function of the machine. A correctly tensioned saw chain increases the service life of the machine.
. Check the chain tension before each use.
. The saw chain is correctly tensioned if it can be pulled around the sword by hand(wear protective gloves) without sagging.
. With new saw chains, you must readjust the chain tension again after a short period of operation.

9. Causes of Kick-back and Prevention

. Kick-back may occur when the nose or tip of the guide bar touches an object, or when the wood closes in and pinches the saw chain in the cut.
. Tip contact some cases may cause a sudden reverse reaction, kicking the guide bar up and back towards the operator.
. Pinching the saw chain along the top of the guide bar may push the guide bar rapidly back towards the operator. Either of these reactions may cause you to lose control of the saw which could result in serious personal injury. Do not rely exclusively upon the safety devices built into your saw. As a saw user, you should take several steps to keep your cutting jobs free from accident or injury.
. Kickback is the result of saw misuse and/or incorrect operating procedures or conditions and can be avoided by taking proper precautions as given below:

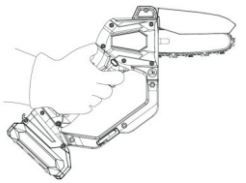

. Maintain a firm grip, with thumb and fingers encircling the saw handle and position your body and arm to allow you to resist kick-back forces. Kick-back forces can be controlled by the operator, if proper precautions are taken. Do not let go the saw.
. When using the saw together with the extension pole, hold the saw firmly with one hand and the other hand with overstretched arm on the extension pole and position

8.7 Chain Lubricating Oil

. Only use commercially available, biodegradable chain oils that are specially designed for use in garden pruner.
. Do not use engine oil, waste oil or other mineral oils.

8.8 Adjusting Saw Chain Tension

CAUTION: Do not tighten the saw chain too much. Excessively high tension of saw chain may cause breakage of saw chain, wear of the guide bar and breakage of the sprocket.
CAUTION: A chain which is too loose can jump off the guide bar.
The saw chain may become loose after many hours of use. From time to time check the saw chain tension before use.
. Remove the battery
. Loosen the head screw a bit to loosen the sprocket cover lightly.
. Adjust the chain tension. Turn the chain adjusting screw clockwise to tighten, turn it counter clock-wise to loosen. Tighten the saw chain so that the gap between the centre of the lower side of the guide bar and the saw chain becomes approximately 3-4mm.

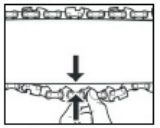

. Tighten the head screw to secure the sprocket cover.

8.9 Switching ON and OFF

The use of the garden pruner without lubricating the chain with chain oil will damage the saw chain and the guide bar.
1. Insert the battery into the battery recess.
2. Hold the garden pruner firmly and securely by the handgrip (Left Cover).
3. To switch on the garden pruner, first press the safety switch and release the switch.
4. Then press the ON/OFF switch within 1 second.
5. To switch off the saw, release the ON/OFF switch.

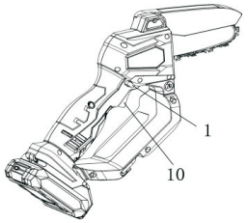

8.10 Break-in Time for new Saw Chains

. Remove the battery ad check the chain tension again. If necessary, re-tighten the chain.

Battery Charge	2.0Ah
Charger	
Input Voltage	100V-240V, 50/60Hz
Power Input	0.8A
Output Voltage	21.5V
Charging Current	Max.1.0A
Charging Temperature	0℃-40℃
Charging Duration	Ca.80 Min.
Protection Class	II
Degree of Protection	IP20

Accessory

Saw Chain Specifications	1/3” Chain Pitch (7.6mm)
	28 Drive Links, 14 Cutting Teeth
Guide Bar Total Length	158mm (6.2”)

8. OPERATION

8.1 Intended Use

. The garden pruner has been exclusively designed for sawing material made of wood, such as chipboard, branches, slats, hard and soft wood. The saw is not intended for continuous commercial use.
. The intended use also includes an operation following the operating instructions.
. In conjunction with the extension handle, the garden pruner can be used as a pruner for cutting branches.
. Any use beyond these parameters (different media, applying force) or any changes (reconstruction, no original accessory) can lead to serious risks and is regarded as use that is contrary to the intended purpose.

8.2 Before first Use

. Remove the garden pruner and the accessory from the packaging.
. Check all parts for damage in transit and do not use damaged accessory or a damaged tool.
. Keep packaging materials out of reach of children. There is risk of suffocation!

8.3 Setting up the Battery Charger

1. If fitted, remove the battery from the battery charger.

2. Insert the battery charger mains plug into a suitable mains socket.

Note: One LED on the charger will indicate ready status. For further information please refer to the included manual of the included charger.
WARNING: Only use the charger to charge compatible batteries that are specifically designed for this tool.
WARNING: The charger is designed for indoor use only and must not be used in damp or wet conditions.

8.4 Charging the Battery

WARNING: Failure to follow the correct procedure when charging batteries will result in permanent damage.
Note: Normal charging time is 1 hour for a recently discharged battery, However, if the battery has been left in a discharged state for some time, it may take up to 1.5 hours to charge.
1. Slide a fully or partially discharged battery onto the battery charger.
2. Once charging commences, t he red LED will illuminate.
3. When the battery is fully charged, the green LED will illuminate.

If the battery is defective the red LED flashes!
Note: Make sure the battery and battery charger are lined up correctly. If the battery does not slide onto the battery charger easily, do not force it. Instead, remove the battery, check the top of battery and the battery charger slot are clean and undamaged and that the contacts are not bent.
Battery Charge Level
The battery has a built-in charge indicator. Pressing on the button to the right will indicate the charge level. The right LED indicate a high charge level and the left a low charge level that will mean the battery will require charging soon.
IMPORTANT: When a low charge level is indicated be aware the tool may stop operating while using the tool. In some instances, this may be dangerous. It is recommended to always ensure the battery has a good charge level.

Notes about Battery Charging
. The battery should be charged at ambient temperatures between 10℃ and 40℃ (ideally around 20℃)
. After charging, allow 15 minutes for the battery to cool before use.
. Ensure that the charger is disconnected from the mains supply after use and is stored correctly.
. Do not leave batteries on charge for extended periods and never store batteries on charge.
. The battery charger monitors battery temperature and voltage while charging. Remove the battery once charging has been completed to maximise charge cycles of the battery and not waste power.
. Batteries can become faulty over time, individual cells in the battery can fail and the battery could short. The charger will not charge faulty batteries. Use another battery, if possible, to check correct functionality of the charger and purchase a replacement battery if a faulty battery is indicated.
. Do not store Lithium-ion battery packs in a discharged state long term. This can damage the Lithium-Ion cells. For long-term storage, store batteries in a high charge state disconnected from the power tool.
. The capacity of batteries will reduce over time. After 100 charge cycles, the battery's operation time and the maximum torque performance of the tools will slightly reduce. This decline will continue until the battery has minimal capacity after 500 charge cycles. This is normal and not a fault with the battery pack.

8.5 Inserting and removing the Battery

Warning: Before inserting or removing the battery pack, make sure the saw is switched off.
1. Slide the battery into battery recess.
2. To remove the battery pack, press the battery's release button and pull the battery off.

8.6 Mounting the Saw Chain

Always wear gloves when handling the saw chain.
1. Unscrew the head screw counter clockwise in order to remove the sprocket cover
2. Run the saw chain over the sprocket (if necessary, remove the guide bar!)
3. Please note the running direction of the saw chain. The saw chain icon is shown on the cover.
4. Use the included oiler to oil the saw chain and the sprocket.
5. Slightly tighten the saw chain with the chain adjusting screw. For tightening, turn the screw clockwise.
6. Re-tighten the sprocket cover with the head screw on the housing.
7. Tighten the saw chain with the chain adjusting screw. Use the adjustment key or a long screwdriver to tighten the screw.



